COLD THAT CARES

evermed

Instruction and maintenance manual

REFRIGERATED CABINET

LITE
CONTROL PANEL

VERS. 0124

CE

Content

1 STANDARDS AND GENERAL WARNINGS 3
1.1 Testing and warranty 3
1.2 Introduction 3
1.3 Product description 3
1.3.1 Standard features 3
1.3.2 Optional features on request 3
1.3.3 Product compliance 4
1.4 User's responsabilities 4
1.5 User service requests 4
1.6 Ordering spare parts 4

2 APPLICATIONS AND TECHNICAL DATA 4
2.1 Applications and destination of use 4
2.1.1 Destination of use, intended and permitted use 4
2.1.2 Improper and unhautorized use 4
2.2 Product configuration 4
2.3 Power output and absorbed power 5
2.4 Noise level 5
2.5 Materials and refrigerants 5

3 HANDLING, INSTALLATION AND DISPOSAL 6
3.1 Transport and handling 6
3.2 Positioning 6
3.3 Wiring and electrical connection 6
3.4 Set-up operations 6
3.5 Disposal 7
3.5.1 Disposal of packaging material 7
3.5.2 Disposal of the appliance 7

4 OPERATION 7
4.1 Safety and accident prevention 7
4.2 Safety devices adopted 8

5 ROUTINE AND PROGRAMMED MAINTENANCE 8
5.1 General safety regulations 8
5.1.1 Prohibition on removing protections and safety devices 8
5.1.2 Indications on emergency measures in case of fire 8
5.2 Cleaning the appliance 8
5.2.1 Internal and external cleaning 8
5.2.2 Cleaning the condenser 8
5.3 Periodic checks 8
5.4 Precautionary measures for prolonged disuse 9
5.4.1 Restart after long inactivity 9

6 SPECIAL MAINTENANCE AND REPAIRS 9

7 DIAGNOSTICS 9

8 USER INSTRUCTIONS 10
8.1 Controls 10
8.1.1 Description of the control panel "LITE" and operating instructions 10
8.1.1.1 Keyboard safety locking protection 10
8.1.2 Visual functionning indications 10

8.2 OPERATION OF THE CONTROL PANEL LITE 11
8.2.1 Start-up 11
8.2.2 Stopping the unit 11
8.2.3 Set-up and adjustment operations 11
8.2.4 Automatic and manual defrosting 11
8.2.5 Alarm signallings 11
8.2.6 Alarm memorization 11
8.2.7 Display the alarm memorized 12
8.2.8 Reset of the alarm list 12
8.2.9 Compressor working hours 12
8.2.10 Display the compressor working hours 12
8.2.11 Reset the compressor working hours 12

8.3 DESCRIPTION OF THE TEMPERATURE CHART RECORDER (OPTIONAL) 13
8.3.1 Description of the temperature chart recorder 13
8.3.1.1 Paper chart replacement 13
8.3.1.2 Ink-tip replacement 13
8.3.1.3 Battery replacement 13

1 STANDARDS AND GENERAL WARNINGS

1.1 TESTING AND WARRANTY

The appliance is tested in our premises in compliance with current regulations and then shipped ready for use.
The warranty is valid for a full 12 months from the date of delivery of the appliance and it covers the repair or replacement of any defective parts, excluding of electrical and electronic components. Any extensions of the warranty period exceeding 12 months must be agreed in advance with the manufacturer. Apparent defects or differences to the client's order must be communicated to the manufacturer within five days from the receipt of the goods or they will not be covered by the warranty terms.
The warranty recognizes the right to request the repair or replacement of defective components, with the absolute exclusion of compensation for direct or indirect damages of any nature. In any event, the entitlement to repair or replacement of the materials must be exercised within the maximum term of the warranty.
The repair or replacement of the defective materials will be carried out at the manufacturer's factory, where the defective material must be shipped with delivery "Ex-works", and returned back with delivery DAP/CIF/CIP.
Under no circumstances will the devices be replaced unless previously agreed with the manufacturer.

1.2 INTRODUCTION

Read the manual carefully and follow the instructions contained therein as they provide important information regarding safe use and maintenance. The user is directly responsible for the operations carried out on the appliance by neglecting the instructions given in this manual. This manual has been drawn up with the aim of providing all the necessary instructions for the correct use of the appliance, for maintaining it in perfect condition and is aimed at the safety of the user.
It is appropriate to define the following professional figures in order to identify their tasks and responsibilities.
Installer: a qualified technician who positions the appliance and places it in service in accordance with the instructions in this manual.
User: the person who, after reading this manual carefully, uses the appliance in accordance with the intended use specified in this manual.
Users' responsibilities:
- to ensure that the products are stored at suitable temperatures and not exceeding the permitted period of time
- to be aware of the regulations about the storage of products and to observe any whatsoever hygiene indications that may be applicable.

The user is obliged to read the manual attentively and refer to the information in the manual at all times.
Particular attention must be paid to the contents of heading 5.1 GENERAL SAFETY WARNINGS.
Routine Maintenance Technician: qualified technician able to perform routine maintenance of the appliance by following the instructions in this manual (see section 5).
Special Maintenance Technician: qualified technician, authorized by the manufacturer to perform extraordinary maintenance of the appliance (see section 6).
The symbol ⚠ appears at certain points in the manual to draw the reader's attention to important safety information.
The manufacturer declines any whatsoever responsibility in the case of improper use of the appliance deviating from the intended use, and for all operations carried out that are not in compliance with the instructions laid down in the manual.
This manual must be conserved in a place that is accessible and known to all operators (installer, user, routine maintenance technician, special maintenance technician).
This manual must not be reproduced or divulged, in whole or in part, using any whatsoever means or in any whatsoever form.

1.3 PRODUCT DESCRIPTION

1.3.1 Standard features

The appliance consists of a modular single structure with panelling in various materials and insulated with high density polyurethane foam mounted on height-adjustable feet for leveling or rollers (depending on the model).
The appliance instruments are located on the front panel which in some models, closes the front part of the cooling unit, inside which the condenser unit and electrical wiring can be housed.
The appliance interior is fitted with suitable supports for open wire shelves and/or other accessories (drawers, baskets and racks).
The doors are equipped with an automatic return device and magnetic seals. The glass doors with high insulating power are equipped with triple panes with cavities filled with inert gas. Any formation of condensation and/or fogging does not directly depend on the appliance itself but can be traced back to the environmental conditions in which the appliance is installed, for example high humidity and ambient temperature and poor air circulation.
Some series of freezers are equipped with a compensation valve which balances the internal pressure of the freezer itself following a door closure, allowing reopening in a short time (variable depending on various factors).
During the design and construction process all measures have been adopted to implement total safety, including rounded interior corners, deep drawing with drain to convey condensate to exterior, no rough surfaces, fixed guards protecting moving or potentially dangerous parts.

1.3.2 Optional features on request

The appliances may be equipped with the following optional accessories:
- Castors or rollers for moving the appliance
- Safety door key locking
- Temperature chart recorder (See par. 8.3)
- Internal electrical socket for connecting electrical devices
- Cable port for inserting external probes
- Non-sparking internal finish (Identified with the S.P. indication on the CE label)
- Back-up cooling unit
- Air sterilization UVA LED lamp
- Safety anti-freezing thermostat
- Temperature uniformity and stability kit

1.3.3 Product compliance
The appliance complies with the relevant European directives as detailed in the CE Declaration of Conformity which can be requested from the manufacturer by referring to the serial number.

1.4 USER'S RESPONSABILITIES
All the following arrangements are the responsibility of the user:
- the electrical connection of the appliance
- the preparation of the installation site
- consumables for cleaning
- routine maintenance

In the case of power failures or malfunctions do not open the doors and drawers in order to maintain the temperature uniformity inside the unit. If the problem persists for more than a few hours, move the stored material to a more suitable place.

1.5 USER SERVICE REQUESTS
For any request for intervention, technical support and spare parts, you must always refer to the SERIAL NUMBER on the CE label and on the front page of the manual.

1.6 ORDERING SPARE PARTS
The request for spare parts must be made by consulting the specific spare parts manual which identifies the correct description of the part to be replaced, the reference code and the serial number that distinguishes the appliance. The manual is available, upon request, from the manufacturer.

2 APPLICATIONS AND TECHNICAL DATA

2.1 APPLICATIONS AND DESTINATION OF USE
The products must be stored in observance of the load limits allowed by the shelves, drawers or baskets in order to ensure efficient air circulation inside the appliance.

DESTINATION OF USE		
MPR	+2°C / +15°C	**Biological refrigerators with glass door for medical-pharmaceutical use**
MPRR	+2°C / +15°C +2°C / +15°C	
HMBR	+2°C / +8°C	
LR	0°C / +15°C	**Biological refrigerators for laboratory use**
LCRR	+0°C / +15°C +0°C / +15°C	
LFG	-5°C / -20°C	**Laboratory freezers**
LF	-5°C / -22 ~ -25°C	
LDF	-15°C / -30°C	
PDF	-25°C / -40°C	
ULF	-50°C / -86°C	
LCRF	+0°C / +15°C -5°C / -20 ~ -25°C	**Combinations of refrigerator/freezer for laboratory**
CI	+2°C / +50°C	**Cooled incubators**

2.1.1 Destination of use, intended and permitted use
The appliance was designed and built for the treatment of medical products, such as conservation and storage in the medical/scientific field.
The device is not suitable for storing blood or blood products that must be reinfused or transfused into the human body as it is not certified according to MDD 93/42/EC or MDR 2017/745/EC.

2.1.2 Improper and unauthorized use
The appliance is not suitable for:
1) treatment of products that require constant monitoring and may endure alteration of its characteristics in the case of temperature changes or interruption of refrigeration. For example:
- general foodstuff
- blood or hemoderivates to be reinfused or transfused in the human body

2) use in places subject to explosive atmosphere
All uses except authorized uses of the appliance shall be construed as "improper use" for which the manufacturer declines all responsibility.

2.2 PRODUCT CONFIGURATION
The appliance is designed and built to work under the following environmental conditions:

SERIE	CLIMATIC CLASS	AMBIENT HUMIDITY
MPR	ST	70%
MPRR	ST	
HMBR	ST	
LR	T	
LCRR	T	
LFG	N	
LF	ST	
LDF	N	
PDF	+16°C / +28°C	
ULF	+16°C / +28°C	
LCRF	N	
CI	ST	

Climatic classes:
• **N** or **temperate class** (ambient temperature from +16°C to +32°C);
• **ST** or **subtropical class** (ambient temperature from +16°C to +38°C);
• **T** or **tropical class** (ambient temperature from +16°C to +43°C).
In places with characteristics different from those expected, it is not possible to guarantee the declared performances.
The power supply voltage must be 230V +/- 10% 50Hz as standard or that indicated on the CE label (any 60Hz and 115V optional on request)

2.3 POWER OUTPUT AND ABSORBED POWER

The technical data relating to the power delivered and absorbed are represented on the CE device identification label as illustrated below.

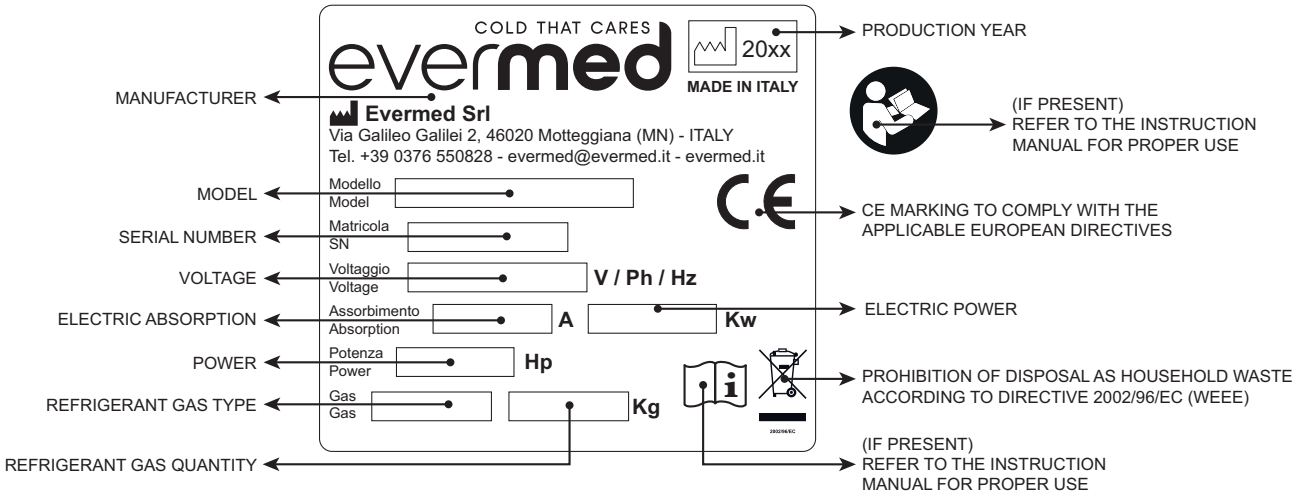

It is necessary to always keep in mind the operating limit characteristics as indicated in par. 2.2.

2.4 NOISE LEVEL

The noise level of the appliance is below 60 dB (A). It changes model-by-model and according to the ambient and working conditions. The data for each device is available in the relevant technical data sheet.

2.5 MATERIALS AND REFRIGERANTS

Materials in contact or potentially in contact with the stored products are in compliance with the relevant directives. The appliance is designed and built so that the parts in contact with the stored material can be cleaned before each use. The refrigerant fluids used are of the latest generation with low environmental impact, HC (hydrocarbon) refrigerants classified as A3, i.e. flammable, compliant with EU regulation 517/2014 F-GAS.
Appliances with flammable refrigerant gases are identified with the appropriate label applied to the appliance (Fig. 5a).
For more information check the appliance's technical identification label.

⚠ **IMPORTANT SAFETY INSTRUCTIONS AND CAUTIONS:** The gas is present in the appliance according to a minimum quantity prescribed by the regulations on flammable gases, but it necessarily involves greater precautions in managing the appliance, especially in the case of interventions on the refrigeration system:
• The refrigerant circuit must not be damaged to avoid leaks into the environment as contact with the gas itself involves the risk of fire in the presence of an adequate trigger such as an open flame or sparks caused by electrical equipment. If replacement of components is necessary, request only original components approved for the specific use.
• In the event of intervention due to faults or malfunctions, contact exclusively qualified personnel who will carry it out according to

the safety regulations envisaged for this type of gas. The equipment required for the interventions must follow the same requirements required for the system components, thus avoiding electrical appliances and flames in the presence of flammable gases.
• For specific vacuum and charging operations on the system, equipment suitable for the type of gas must be used, avoiding the presence of flammables in the environment and in particular contact with flames or sparks.

3 HANDLING, INSTALLATION AND DISPOSAL

3.1 TRANSPORT AND HANDLING

⚠ The appliance must be transported and handled exclusively in a vertical position, in observance of the instructions printed on the packing.This precaution is necessary to avoid contamination of the refrigerant circuit with compressor lube oil with resulting valve and heat exchanger coil failure and problems starting the electric motor.
The manufacturer accepts no responsibility for problems due to transport executed in conditions other than those specified above.
The accessories supplied with the appliance (slides, wire shelves, drawers, baskets, rack) are supplied in separate packs shipped inside or separately from the unit.
The appliance is fixed to a wooden pallet using plastic straps and packaged in polyethylene, cardboard, cage or crate packaging.
Refer to heading 3.5.1 for information on correct disposal of packing material.
⚠ The appliance must be handled using a fork lift truck or a pallet truck with suitable forks (fork length at least equal to 2/3 length of unit).

3.2 POSITIONING

Incorrect positioning can cause damage to the appliance and generate hazardous conditions for personnel. The installer must therefore observe the following general regulations:
- removal of the wooden pallet: cut the fixing plastic ties located under the appliance (Fig.1), lift the appliance from the rear to allow the feet (or optional rollers/castors) to exit from the relevant wooden retaining stops
  Drag the appliance from the rear keeping it slightly tilted backwards and remove the pallet from the front
  Use gloves when handling wooden packing materials and the wooden pallet to protect the hands from splinters
- remove packing material (polyethylene, cardboard box, crate, cage)
- remove accessories from inside the unit
- position the appliance maintaining a minimum distance of 5 cm from any wall and 20 cm from the ceiling
- position the appliance with the help of a spirit level. Adjust the levelling feet on the metal base of the unit if necessary (Fig. 2)
- the room must be well ventilated
- keep well away from sources of heat
- avoid direct sunlight
- fix the anti-seismic/overturning chain to the wall (rear part of the appliance) with a dowel (if supplied)
- remove the protective PVC film from the external surfaces of the unit
- position the shelf slides (for shelf, drawer or basket) in the holes in the uprights racks (Fig. 3)
- insert the shelves (drawers or baskets) in the slides

3.3 WIRING AND ELECTRICAL CONNECTION

The electrical circuit and electrical connection operations must be performed by a qualified electrician.
For safety reasons it is necessary to comply to the following indications:
- check that the electrical plant is suitably sized for the absorbed power of the unit and includes a differential switch
- if the electrical socket and the plug on the appliance power cord are incompatible, change the plug with a suitable component, ensuring the replacement part is of the approved type
- do not use reductions or multi-way adapters (Fig. 4)
- check the impedance value of the power supply; the impedance value of the power supply should not exceed 0,075 ohm

It is important to connect the appliance correctly to an efficient earth system executed in compliance with the relevant legislation.

3.4 SET-UP OPERATION

To avoid errors and accidents, perform a series of checks for possible damages sustained during transport, installation and hook-up operations before starting up the unit.

Preliminary checks
- check the condition of the power cord (no cuts or chaffing)
- check that the feet (or rollers/castors), door hinges and shelf supports are stable
- check the condition of internal and external components (pipelines, heat exchanger elements, fans, electrical components, etc.), check also that all parts are firmly fixed into position
- check that the door seals, shelves and drawers are not damaged (broken or scratched) and that the doors close and are sealed properly

The user must also observe the following instructions to obtain the best operation from the appliance:

Indications for optimal functioning
- do not block the motor compartment air vents
- do not store warm products
- arrange the products on suitable shelves, drawers, baskets and rack. Do not place products directly on the base or against the walls, doors or fixed guards of the unit
- make sure doors are kept closed
- keep the defrost water drain outlet clear
- limit the frequency and duration of door opening; each time the door is opened the internal temperature changes
- load new material at ambient temperature gradually to allow correct refrigeration
- perform routine maintenance regularly (see section 5).

- in the event of an interruption in the electrical power supply circuit or a fault, avoid opening the doors in order to maintain a uniform temperature inside the refrigerated cabinet; if the problem lasts for several hours, we recommend moving the material to a suitable place

Instructions for the first start-up
- after connecting the appliance plug to a suitable electrical socket, proceed with switching it on following the specific instructions indicated in paragraph 8.2.1
- wait for the appliance to reach the set temperature and stabilize
- turn off the appliance
- start arranging the products on the appropriate shelves, drawers, baskets, racks gradually, until the loading is completed
- close the doors carefully
- restart the appliance following the specific instructions in paragraph 8.2.1

3.5 DISPOSAL

3.5.1 Disposal of packaging material
To dispose of the packaging material, refer to the instructions on the label attached to the external packaging (if present) and/or follow the instructions below:

ENVIRONMENTAL INFORMATION ON PACKAGING		
TYPE OF PACKAGING	**CODING BY DECISION 129/97/EC**	**SEPARATE WASTE COLLECTION**
CARDBOARD BOX	PAP 20	PAPER
PLASTIC STRAP	PP 5	PLASTIC
STRETCH FILM	LDPE 4	PLASTIC
POLYSTYRENE PROTECTION	PS 6	PLASTIC
SCOTCH TAPE	PP 5	PLASTIC
PROTECTIVE BAG	LDPE 4	PLASTIC
PLURIBALL	LDPE 4	PLASTIC
BAGS FOR EQUIPMENT	LDPE 4	PLASTIC
WOODEN PALLET AND CAGE	FOR 50	WOOD

The product packaging may also partially contain the types of packaging listed above.
Differentiate according to the type of material and the indications of the Municipality.

2002/96/EC

3.5.2 Disposal of the appliance
Demolition and disposal must be carried out in compliance with the regulations in force in your country.
The symbol at the side means that this product should not be treated as a household waste.
To prevent potential negative consequences for the environment and health, be sure this product is correctly disposed of and recycled.
For further information on the disposal and recycling of this product, please contact your Distributor, after Sales Service or the waste Treatment Service.

4 OPERATION

4.1 SAFETY AND ACCIDENT PREVENTION
The appliance embodies various features designed to assure the safety and protect the health of the user. The following list describes the protections adopted against mechanical risks:
- **stability:** the appliance is designed and built so that even with the shelves, drawers or baskets fully extracted in the intended conditions of operation it will remain stable so that it can be used with no risk of tilting, falling or sudden movement
- **surfaces, edges, corners:** accessible parts of the appliance have no sharp corners, sharp edges or rough surfaces that could cause injury
- **moving parts:** moving parts of the unit are designed, built and configured to avoid risk. Moving parts are protected by fixed guards to prevent accidental contact that could result in injury

Measures adopted for protection against additional risks:
- **electrical power:** the appliance is designed, built and fitted out with the aim of preventing the risk of electric shock in compliance with established safety legislation
- **noise:** the appliance is designed and built to reduce risks related to the emission of airborne noise to a minimum

4.2 SAFETY DEVICES ADOPTED

It is absolutely forbidden:
- tamper with or remove the evaporator cover which protects the user from the risk of cutting the evaporator fins and fan blades if present
- remove the CE labels identifying the appliance indicating the technical characteristics and warnings for earthing connection
- remove the plate (present on some models) applied to the back of the appliance which warns you to turn off the power before working on it
- remove the sticker applied to the compressor indicating the charge with flammable refrigerant gases (Fig. 5a)
- remove the stickers applied inside the engine compartment, indicating the presence of voltage (Fig. 5b), the presence and power of the fuse (Fig. 5c), the earthing (Fig. 5d)
- to remove the data tag fixed to the power cord showing the type of power supply (Fig. 5e)

The manufacturer declines any responsibility for the safety of the appliance if this were to happen.

5 ROUTINE AND PROGRAMMED MAINTENANCE

The information in this section regards the user, or other non-specialized personnel, and the routine maintenance technician.

5.1 GENERAL SAFETY REGULATIONS

The user, ordinary and extraordinary maintenance technician can carry out ordinary maintenance operations in conditions of absolute safety by respecting the following instructions:
- do not touch the unit with wet hands and/or feet
- do not use the appliance with bare feet
- do not insert screwdrivers or other pointed objects between guards or moving parts of the appliance
- do not allow the appliance to be used by minors or non-professional users
- do not pull the power cord to disconnect the appliance from the mains supply
- before performing any cleaning or maintenance on the appliance disconnect it from the mains supply by switching of the main switch and extracting the plug
- in the event of a fault and/or malfunction of the appliance, turn it off and refrain from any attempt at repair or direct intervention but it is advisable to contact qualified personnel only

5.1.1 Prohibition on removing protections and safety devices

It is strictly forbidden to remove guards or safety devices when performing routine maintenance work.
The manufacturer disclaims all liability that may arise if this regulation is not observed.

5.1.2 Indications on emergency measures in case of fire

- disconnect the appliance from the electrical power socket or switch off the master switch on the electrical mains line
- do not use water to douse fires
- use powder or foam extinguishers

5.2 CLEANING THE APPLIANCE

In view of the usage destination of the appliance, it is important to keep it clean for reasons of hygiene and health. The appliance is thoroughly cleaned in our factory before delivery. We recommend, however, to clean the interior of the appliance before use. Before cleaning the appliance make sure the power cord is disconnected.

5.2.1 Internal and external cleaning

For this purpose the following are indicated:
- cleaning products: water and non-abrasive neutral detergent. DO NOT USE SOLVENT OR THINNERS
- cleaning method: use a cloth or sponge soaked in a suitable cleaning product to clean the interior and exterior parts of the cabinet
- sanitation: do not use substances that could alter the stored products
- rinsing: use a cloth or sponge soaked in clean water. DO NOT USE WATER JETS
- frequency: once a week or at different intervals in accordance with the type of product conserved

IMPORTANT: Clean the door seals frequently. (Fig. 7). Some stored products may release vapors or substances that attack the seal, deteriorating it very quickly. For cleaning, use specific products available on request also from our sales network.

5.2.2 Cleaning the condenser

The condenser will work less efficiently if it is obstructed with foreign material so it must be cleaned once a month. Before cleaning the condenser switch off the appliance, disconnect the power cord and proceed as follows:
Motor at the bottom - in the upper part of the protection grid in the motor compartment, unscrew the appropriate fixing screws and remove it or open it if equipped with hinges
Motor on top - access the condenser located on the top of the appliance
Having access to the condenser, with the aid of a jet of air, a vacuum cleaner or a dry brush, eliminate the dust and fluff deposited on the fins on the front part of the condenser itself (Fig. 6). During this operation, use the following personal protective equipment: glasses, respiratory protection mask, protective gloves.

5.3 PERIODIC CHECKS

The following components of the appliance require periodic checking:
- condition and efficiency of the door sealing elements
- condition of shelves in contact with the products
- condition of hinges and correct fixing of the doors
- condition of electrical cables and electrical parts

It is advisable for the checks listed above to be carried out at least once a year.

5.4 PRECAUTIONARY MEASURES FOR PROLONGED DISUSE

If the appliance is to remain unused for more than 15 days proceed as follows:
- switch off the appliance and disconnect it from the electrical supply
- clean the interior of the cabinet, shelves, drawers, baskets, slides and supports, paying special attention to critical areas such as contact point and magnetic sealing strips in accordance with the indications in heading 5.2.
- leave doors slightly open to prevent accumulation of residual humidity

5.4.1 Restart after long inactivity

Restarting after a long period of inactivity is an event that requires routine checks and maintenance.
It is necessary to carry out careful cleaning as described in par. 5.2.
Check the correct running of the controls. We recommend you to take out a service or maintenance contract with your dealer covering:
- cleaning of the condenser
- checking of the general functioning
- electrical safety

6 SPECIAL MAINTENANCE AND REPAIRS

All maintenance work not described in the previous sections must be considered “Special Maintenance”.
Special maintenance interventions and repairs are to be performed exclusively by specialized technicians authorized by the manufacturer.
The manufacturer declines all liability in the case of work performed by the user or unauthorized persons, or if non-original spare parts are fitted to the appliance.

7 DIAGNOSTICS

The following problems may occur as indicated in the table below:

FAULT	POSSIBLE CAUSE	ACTION
appliance does not switch on	appliance turned off	press the button ON/OFF
	power failure	check plug, socket, fuses of the electrical line and those of the appliance
	other	contact service department
cooling unit does not start	set temperature has been reached	set new temperature
	defrosting cycle in progress	wait for cycle end, switch off and then on again
	control panel fault	contact service department
	probe failure	contact service department
	other	contact service department
cooling unit runs constantly but does not reach set temperature	room temperature too high	provide better ventilation of room
	condenser dirty	clean the condenser
	refrigerant needs recharging	contact service department
	condenser/evaporator fan not running	contact service department
	door seals are not efficient	check seals / make sure appliance contents are not obstructing doors
	evaporator is coated with ice	defrost manually
	other	contact service department
cooling unit does not cut out at set temperature	control panel fault	contact service department
	probe failure	contact service department
build up of ice on evaporator	improper use	see par. 3.4
	control panel fault	contact service department
	probe failure	contact service department
water or ice deposits in the drip tray	drain outlet is clogged	clean drain and drain outlet
	appliance not level	see par. 3.2

8 USER INSTRUCTIONS

The information in this section of the manual regards the user or other non-specialized personnel (see par. 1.2). After the appliance has been installed in accordance with the instructions of section 3 of this manual, it is ready for use.

8.1 CONTROLS

According to the models, the appliance is equipped of different types of controls:
- Control panel **Fig.39**
- Temperature chart recorder **Fig.40**

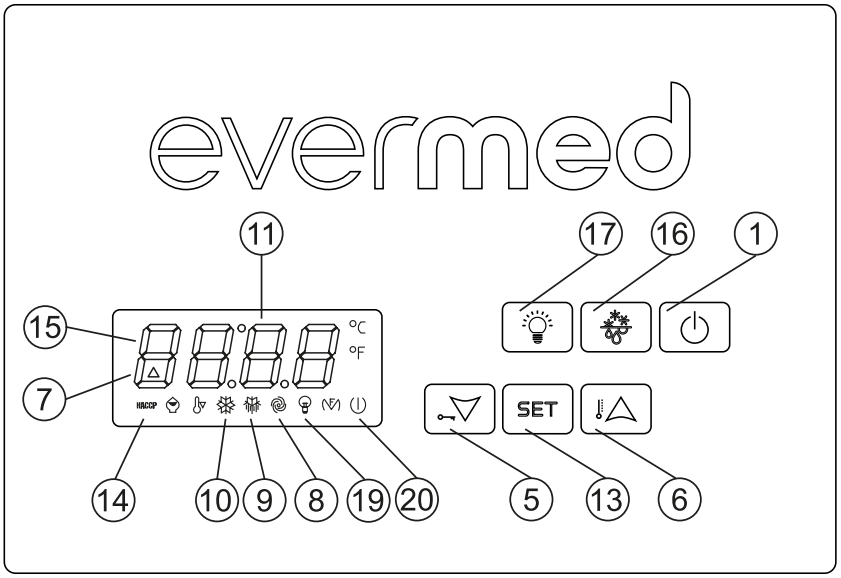

Fig.39

8.1.1 Description of the control panel LITE and operating instructions Fig.39

The internal temperature is automatically displayed and controlled through a digital control thermo-regulator and the lighting icons give indication of the functioning status. The temperature controller is provided with 6 keys with the following specific functions:
- Display **(11)**, to check temperature and operation of the machine.
- STAND-BY pushbutton **(1)**. If pressed for 5 seconds light on the thermo-regulator
- SET pushbutton **(13)**. If pressed allows the regulation of the working set of the machine
- UP pushbutton **(6)**. It allows the increasing of the values, (higher temperature or higher values during the programming phase). If pressed, signs on the display an alarm indicating “rLS”.
- DOWN pushbutton **(5)**. If pressed allows the decrease of the values (lower temperature or lower values during programming phase). If pressed, for more than 2 seconds, accede directly to the under menu of probes temperature, alarm visualization, compressor working hours and regulation of the internal watch.
- DEFROSTING pushbutton **(16)** progress a manual defrosting cycle.
- LIGHTING pushbutton **(17)** lights the internal lighting .

All the keys, if pressed, have also the function of silencing the buzzer of the thermo-regulator and memorize the possible alarms.

8.1.1.1 Keyboard safety locking protection

The control panel keyboard is provided with a keys locking protection, to avoid tampering from unauthorized personnel. The key locking protection has to be activated from the user if necessary.
- press at the same time DOWN and ON/STANDBY pushbuttons for 2 seconds and the display will show “Loc” (keyboard locked).

If the keyboard is locked, it will not be possible to execute any operation with the keys and if pressed the display will show “Loc”.
To unlock the keyboard:
- press at the same time DOWN and ON/STANDBY pushbuttons for 2 seconds and the display will show “UnL” (keyboard unlocked)

At this stage it will be possible to use again the keys and their functionalities.

8.1.2 Visual functioning indications Fig.39

The thermo-regulator lights the following icons for functions in progress:
- ON/STANDBY Led **(20)**, turns on when the machine is connected but in stand by.
- COMP led **(10)** lights steadily when the compressor is running, blinks in case of starting delay or when protection is active
- FAN led **(8)** lights steadily when the evaporator fan is working
- DEF led **(9)** lights steadily during defrosting cycle
- ALL led **(7)** lights steadily for alarm of temperature and probe faulty
- HACCP led **(14)** lights steadily or intermittent to signalized alarm of an HACCP memorized

In the thermo-regulator appears the followings signals for functions in progress:
- CH led **(15)** (adjustable wrench) lightly or intermittent signalizes a request of program maintenance for the compressor working hours.
- LI led **(19)** lightly when the internal light is on

8.2 OPERATION OF THE CONTROL PANEL LITE

8.2.1 Start-up

Before starting up the unit check that the electrical connections have been made correctly as indicated in headings 3.3 and 3.4.
Perform preliminary cleaning of the unit as described in sub-heading 5.2.
Starting sequence **Fig.39**
- press STAND-BY pushbutton for 5 seconds and the display lights up
- wait until the display stop blinking
- set the internal watch with the actual hour

The first step to do is the regulation of the internal watch in the following way:
- press the DOWN key for 2 seconds. The display will evidence “rtC” (real time clock)
- press the SET key and the display will evidence yy00 (year). Press up or down to change it
- press the SET key and the display will show up nn01 (month). Press up or down to change it
- press the SET key and the display will show up dd01 (day). Press up or down to change it
- press the SET key and the display will show up hh00 (hour). Press up or down to change it
- press the SET key and the display will showup nn00 (minutes). Press up or down to change it and then press SET.

At the end of the complete set up do not operate on the pushbuttons for 60 seconds.
Automatically it will memorize the new settings and exit of the process.

8.2.2 Stopping the unit Fig.39

Press STAND-BY pushbutton for 5 seconds and the display switches off. In case the appliance will remain off for a prolonged period, it is strongly recommendable to remove the appliance plug from the power socket.

8.2.3 Set-up and adjustment operations

The appliance is factory set to operate in the temperature ranges indicated in the "DESTINATION OF USE" table par. 2.1.
If you intend to use different temperatures, proceed as follows **Fig.39**:
- press SET **(13)** and release. The display shows the actual programmed temperature
- to increase the temperature, press the UP key **(6)** within 5 seconds
- to lower the temperature, press the DOWN key **(5)** within 5 seconds

The instrument automatically memorizes the programmed temperature last value.

8.2.4 Automatic and manual defrosting

The appliance is factory set for automatic defrosting at pre-set intervals.
If you wish to defrost manually in accordance with effective requirements, proceed as follows **Fig.39**:
- press the DEFROST pushbutton **(16)** for more than 3 seconds

During the automatic or manual defrost cycle the DEF led **(9)** on the control panel will be steadily illuminated. At the end of the defrost cycle the led will switch off and the appliance automatically resumes its normal operating cycle.

8.2.5 Alarm signallings

The thermo-regulator, in occasion of an alarm condition, will activate a buzzer for the acoustic signalling and light-up the led 7, and it will signal, with a code indication, the type of alarm. The display will indicate:

Alarm code	Description
Pr1	Faulty chamber probe
Pr2	Faulty evaporator probe
Pr3	Faulty condenser probe
COH	Overheated condenser
DFd	End of defrosting with after maximum time allowed
AL	Low temperature alarm
AH	High temperature alarm
PF	Power failure
id	Door ajar alarm
Rtc	Wrong programmation of the internal watch (must be programmed again)
RLS	Signals the presence of an alarm in the memory
LS	Alarm folder

The thermo-regulator can store, into its memory, up to 3 alarms (HACCP). The controller provide the following information :
- critical value of temperature
- date and real time of alarm registration
- duration of the alarm (from 1 until 99h e 59 min., partial if alarm in progress)

The values of the alarm limits are factory set and change according to the product series.

8.2.6 Alarm memorization

When the value of the temperature of the appliance goes out of the pre-fixed minimum or maximum limits, it will appears an alarm signal and automatically created a folder “LS” in the thermo-regulator menu. The folder contains the highest and lowest values achieved from the temperature and the time of the alarm in progress registered.

8.2.7 Display the alarm memorized

The alarms generated by the thermo-regulator are displayed as follows:
- press DOWN key **(5)**, for 2 seconds. The display will show the first label available
- press UP key **(6)** or DOWN **(5)** to select the “LS” label (alarms folder)
- press SET key **(13)**. The display will evidence the type of alarm (AL, AH)
- press once more the SET key **(13)** to see the temperature value and alarm duration, moreover date and real time of the alarm registration and conditions in progress.

Example:

AH1	High temperature alarm
20	Highest temperature achieved
Sta	Viewer of date and hour of the alarm
y (23)	Year of alarm registration
n (09)	Month of alarm registration
d (15)	Day of alarm registration
h (16)	Hour of alarm registration
n (30)	Minutes of alarm registration
Dur	Viewer of the alarm duration
h (2)	Hour of duration of the alarm conditions
n (30)	Minutes of duration of the alarm conditions

In the above example, the thermo-regulator registered an alarm for high temperature (AH1), the temperature has reached 20°C on the 15th of September 2023 at 04.30 pm and the alarm lasted 2 h and 30 minutes.
To the exit of the alarm displaying don’t operate in any other key for 15 seconds.

8.2.8 Reset of the alarm list

To reset the alarm folders proceed in the following way:
- press DOWN pushbutton **(5)** for 2 seconds
- press UP or DOWN pushbutton to select label “rLS”
- press SET pushbutton **(13)**, and see 0
- press UP pushbutton **(6)** within 15 minutes to set the value 149
- press SET pushbutton **(13)** and don’t act any other operation kind for 15 seconds

The display will show ----- in intermittence for 4 seconds and the icon HACCP will turn off. If there isn’t any other kind of alarm in memory, the label “rLS” will not be shown up. If the alarm folder will not be delete the most recent alarm will substitute the oldest one.

8.2.9 Compressor working hours

The controller is able to memorize until 9999 of the compressor working hours to program the maintenance operation.
At the expiry of the programmed hours suggested as maintenance interval, the icon 15 (wrench) will light up on the display.

8.2.10 Display the compressor working hours

- press for 2 seconds the DOWN pushbutton **(5)** and the display will show the first label available
- press UP or DOWN pushbuttons to select CH
- press SET and the display will show the working hours of the compressor

To exit press SET **(13)** or don’t operate for the next 15 seconds.

8.2.11 Reset the compressor working hours

- press for 2 seconds the DOWN pushbutton **(5)** and the display will show the first label available
- press UP or DOWN pushbuttons to select “rCH”
- press SET **(13)** and the display will show 0 (zero)
- press UP pushbutton **(6**) and program 149
- press SET **(13)** and don’t operate for the next 15 seconds. The display will show ------ blinking for 4 seconds and the value of the hours will be deleted.

For more instructions regarding the thermo-regulator function see the manual in attachment.

8.3 DESCRIPTION OF THE TEMPERATURE CHART RECORDER (OPTIONAL)

8.3.1 Description of the temperature chart recorder Fig.40

The appliance may be fitted (present if ordered in some series), with the temperature chart recorder, recording on paper charts the appliance internal temperature. The temperature recorder is available in different temperature ranges according to the model on which it is installed:
- Range : -10°C / +40°C
- Range : -35°C / +15°C
- Range : -50°C / +50°C

The detection of the chamber temperature is done with a sensor independent from the control panel sensor, while the recording, with weekly operation, is on paper charts with an ink-tip. The temperature recording is granted even during power failure periods thanks to the battery powering the recording device. The battery is 1,5V, AA type. A perspex cover allows checking the diagrams but at the same time it protects them against tampering of unauthorized personnel thanks to the key locks safety or closing knot.

Fig.40

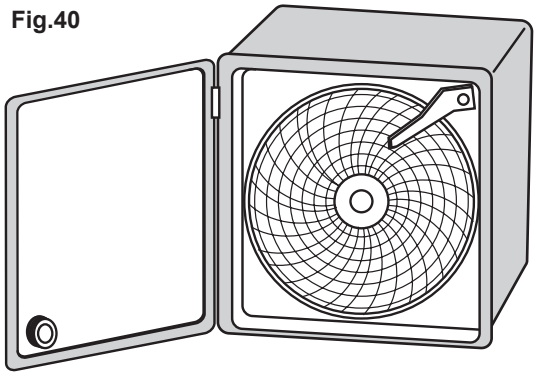

8.3.1.1 Paper chart replacement

- Open the perspex cover
- Unscrew the fixing nut
- Lift gently the metal arm on which is fitted the ink-tip
- Remove the installed paper chart, paying attention at the 2 metal edges surrounding the chart that keep it in position
- Insert the new paper chart, paying attention to insert it into the central hinge and into the 2 metal edges surrounding the chart
- Lower gently the metal arm on which is fitted the ink-tip in order to return it in the original position
- Drive the paper chart in order to position the ink-tip writing point in the exact point from which it has to start to record the temperature, paying attention not to write on the diagram. In order to choose the exact recording start point, refer to the days and times printed on the chart itself
- Screw the fixing nut
- Close the perspex cover

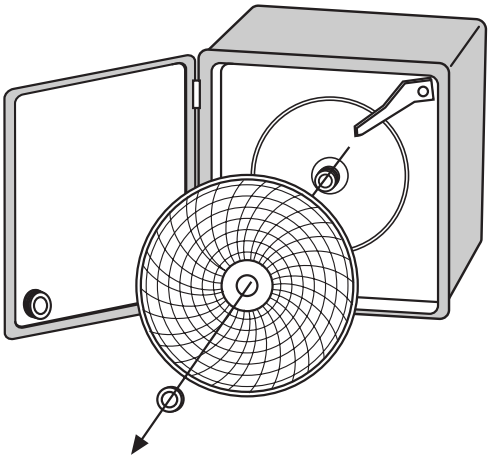

8.3.1.2 Ink-tip replacement

- Open the perspex cover
- Lift gently the metal arm on which is fitted the ink-tip
- Remove, pulling, the ink-tip from the metal arm
- Insert the new ink-tip on the metal arm paying attention to the guideways on the ink-tip itself. Push until reach the limit-stop
- Lower gently the metal arm on which is fitted the ink-tip in order to return it in the original position
- Close the perspex cover

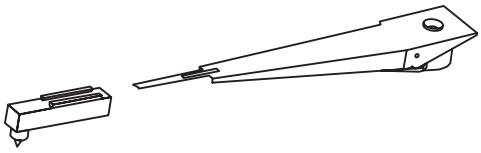

8.3.1.3 Battery replacement

- Open the perspex cover
- Unscrew the fixing nut
- Lift gently the metal arm on which is fitted the ink-tip
- Remove the installed paper chart, paying attention at the 2 metal edges surrounding the chart that keep it in position
- Pull the central hinge on which was screwed the nut and, at the same time, moving slightly up and down to make easier the extraction of the clockwise mechanism
- Replace the battery in the rear side of the clockwise mechanism paying attention to the battery polarity
- Insert the clockwise mechanism in the hole left on the chart recorder, simply making pressure on the mechanism
- Insert the paper chart, paying attention to insert it into the central hinge and into the 2 metal edges surrounding the chart
- Lower gently the metal arm on which is fitted the ink-tip in order to return it in the original position
- Drive the paper chart in order to position the ink-tip writing point in the exact point from which it has to start to record the temperature, paying attention not to write on the diagram. In order to choose the exact recording start point, refer to the days and times printed on the chart itself
- Screw the fixing nut
- Close the perspex cover

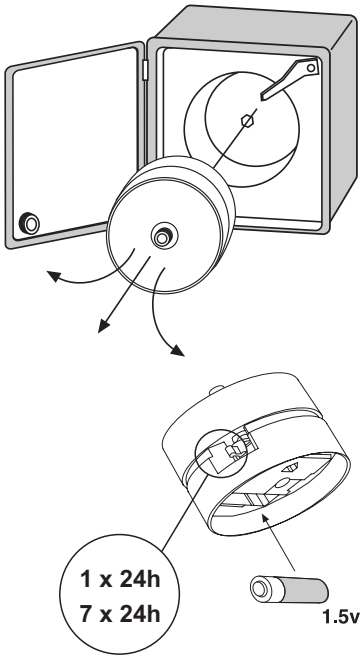

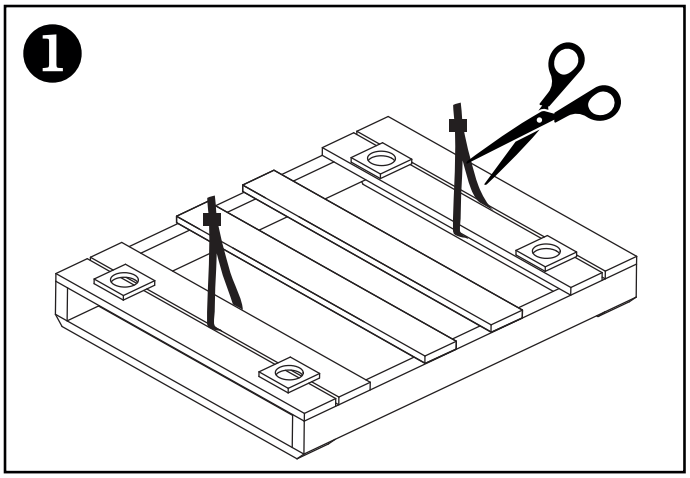

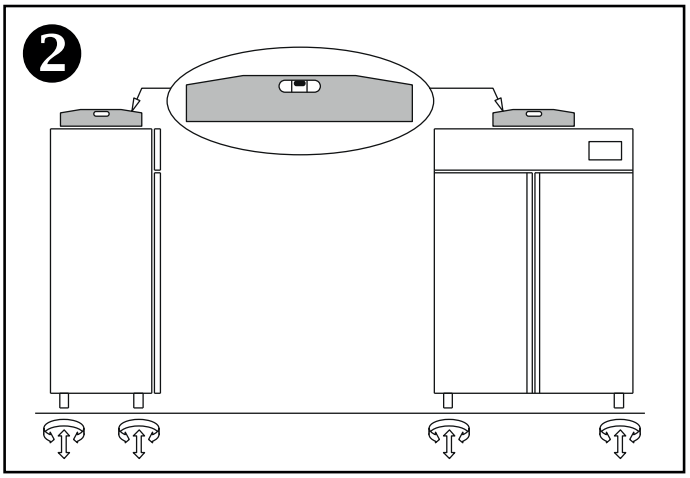

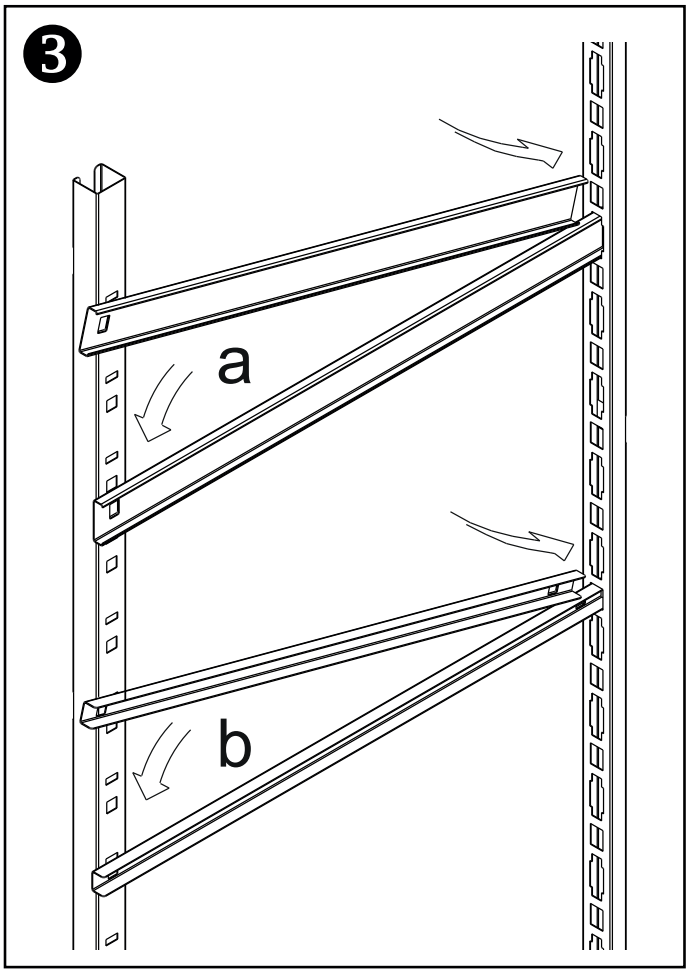

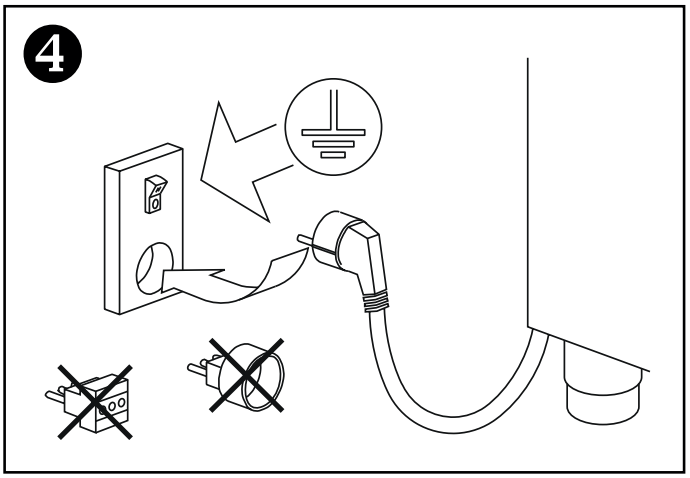

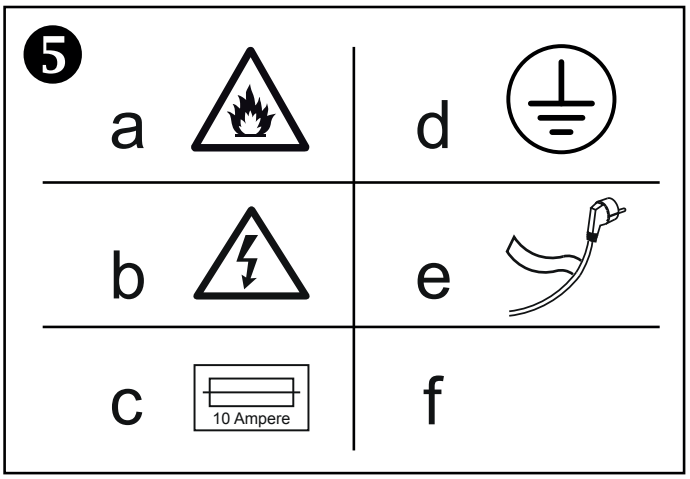

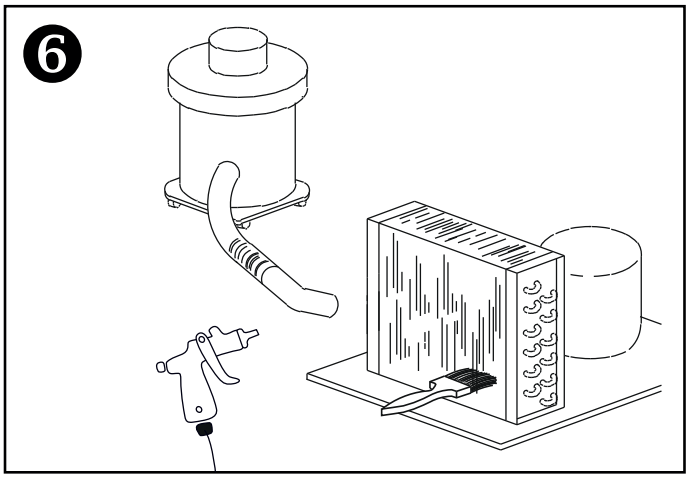

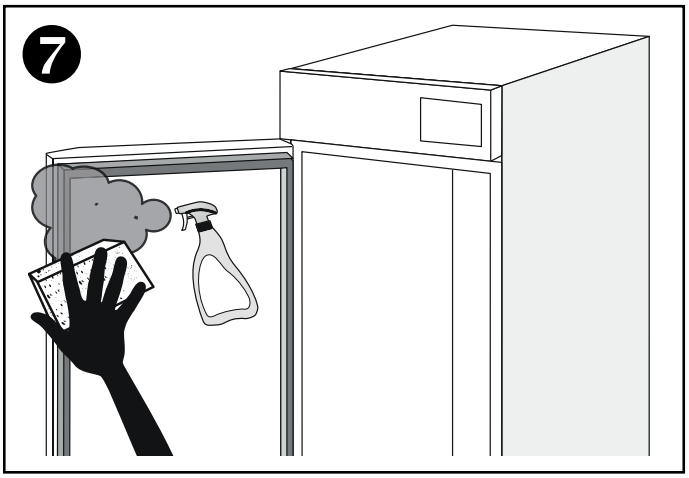

COLD THAT CARES
evermed

Evermed srl: Via Galileo Galilei, 2 - 46020 Motteggiana ITALY - Tel. +39 0376 550828 - www.evermed.it - e-mail: evermed@evermed.it